Chapter 6

Computer Networks

OBJECTIVES

After studying this chapter, the student should be able to:

- **Describe network criteria, physical structures and categories of networks.**
- **Describe the TCP/IP protocol suite as the network model in the Internet.**
- **Define the layers in the TCP/IP protocol suite and their relationship.**
- **Discuss the client-server architecture of the Internet.**
- **Describe the three early applications of the Internet:**
- **Understand the World Wide Web as the most common application of the Internet and its components.**
- **Distinguish between three Internet document types: static, dynamic and active.**

6.1

INTRODUCTION

Description

- A **network** is a combination of hardware and software that sends data from one location to another.
  - The hardware consists of the physical equipment that carries signals from one point in the network to another.
  - The software consists of instructions that make the services that we expect from a network possible

Network Criteria

- **Performance** can be measured in many ways, including transit time and response time.
- **Reliability** is measured by the frequency of failure, the time it takes to recover from a failure, and the network's robustness in a catastrophe.
- **Network security** issues include protecting data from unauthorized access, damage and change, and implementing policies and procedures for recovery from breaches and data losses.

Physical structures

- **Types of Connection:**
  - A network consists of two or more devices connected through **links**.
  - A link is a communications pathway that transfers data from one device to another.
  - Two possible types: **point-to-point** and **multipoint**.

Physical structures

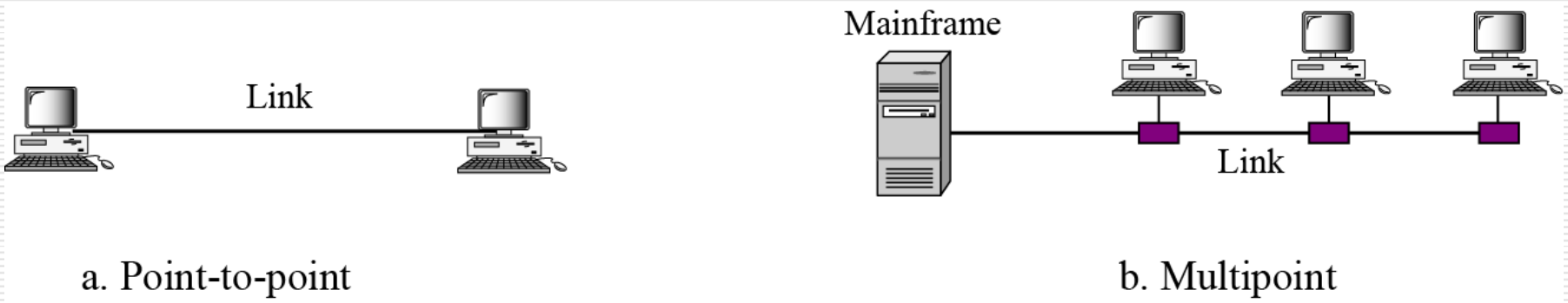

Figure 6.1 **Types of connections: point-to-point and multipoint**

Physical topology

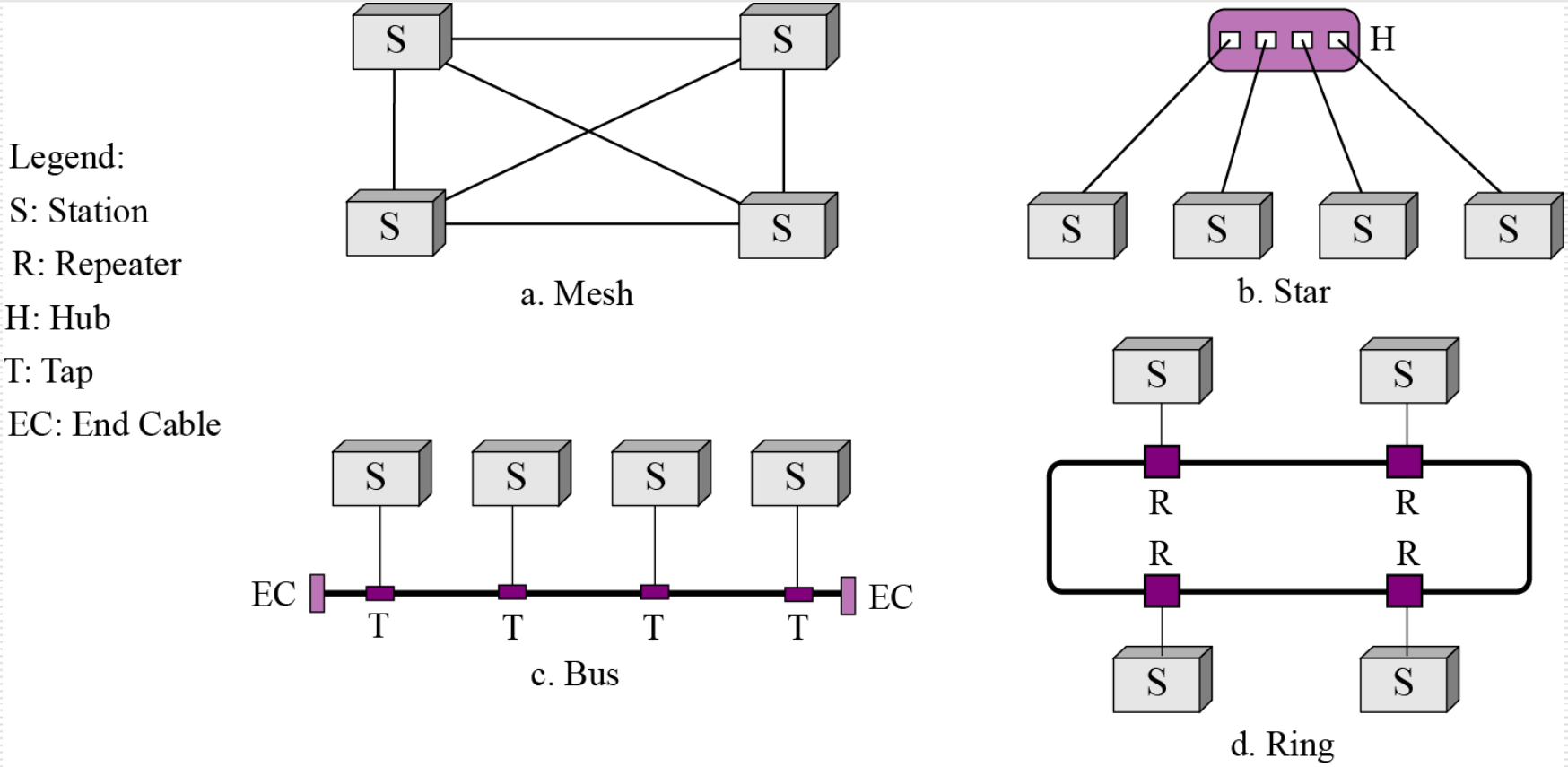

Figure 6.2 **Four physical topologies**

Categories of networks

- Three broad categories
  - **local-area networks (LANs)**
  - **Wide-area networks (WANs)**
  - **Metropolitan area networks (MANs)**.

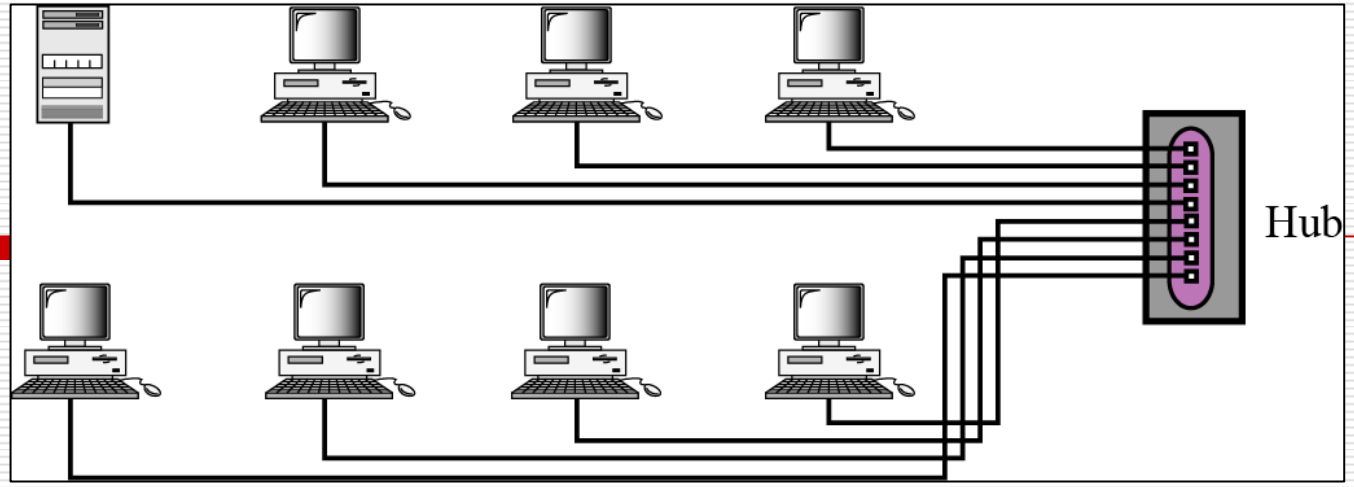

Figure 6.3 **An isolated LAN connecting eight computers to a hub**

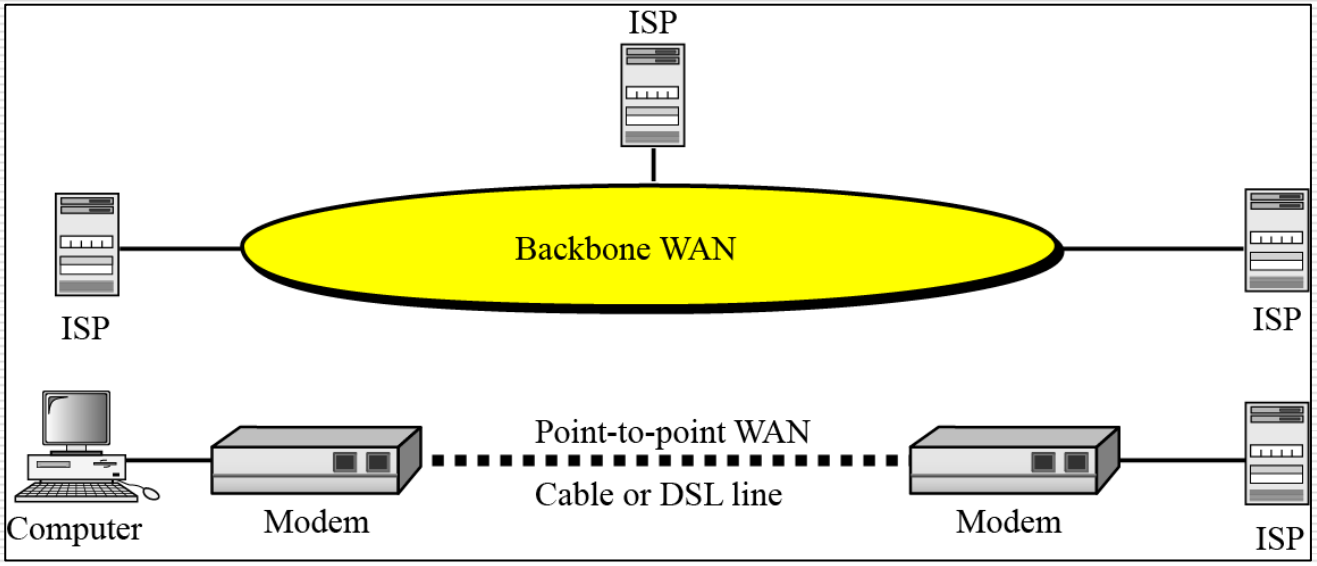

Figure 6.4 **A point-to-point WAN and a backbone WAN**

An Internet

- Networks are connected to one another.
- When two or more networks are connected, they become an **internetwork**, or an **internet** (lowercase "i").

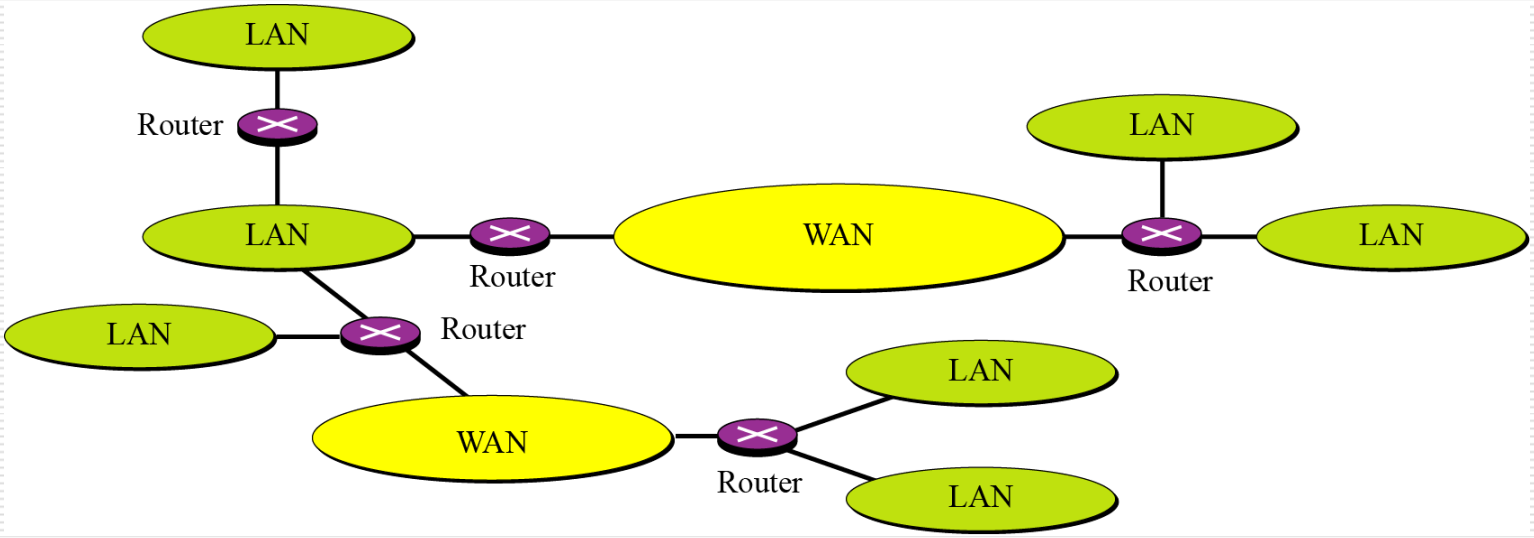

Figure 6.5 **An internet made of WANs, LANs, and routers**

The Internet

- The most notable internet is the **Internet** (uppercase “I”), a collaboration of hundreds of thousands of interconnected networks.
- Private individuals use the Internet. Millions of people are users.
- Most end users who want an Internet connection use the services of **Internet service providers (ISPs)**.

The Internet

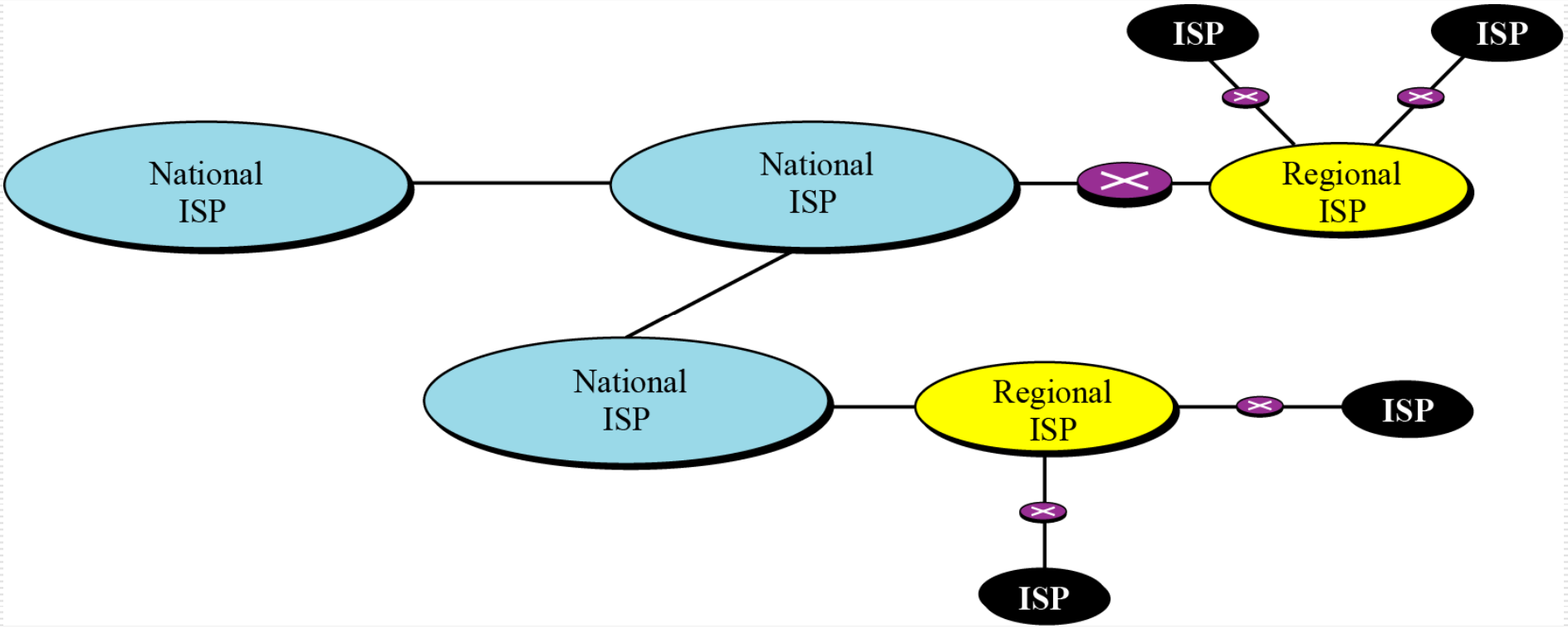

Figure 6.6 **Hierarchical organization of the Internet**

6.2

TCP/IP PROTOCOL SUITE

TCP / IP

- **Protocols (a set of rules on Internet)**
  - These allow different local and wide area networks, using different technologies, to be connected together and carry a message from one point to another.
- **TCP / IP protocol suite**
  - The set, or suite, of protocols that controls the Internet today
  - The abbreviations (TCP and IP) will become clear as we explain different protocols.

TCP / IP

- The original TCP/IP protocol suite was defined as having four layers
- The TCP/IP protocol suite today is a five-layer model

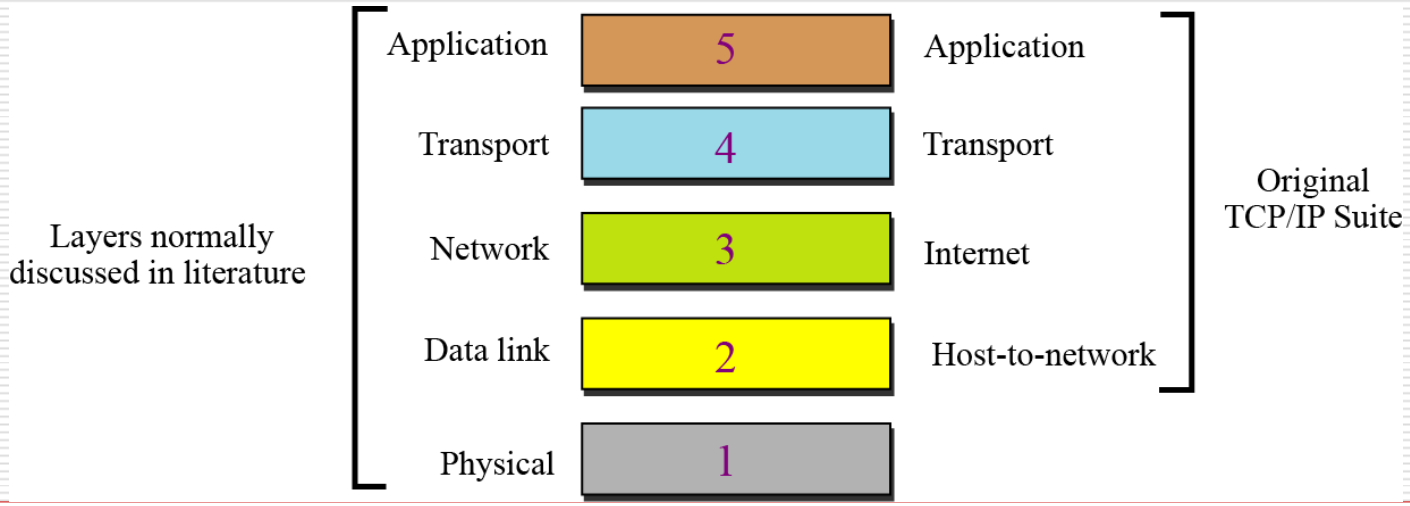

Figure 6.7 **The TCP/IP protocol suite**

TCP / IP

- Figure 6.8 shows the layers involved when a message is sent from device A to device B.
  - Routers use only the first three layers.

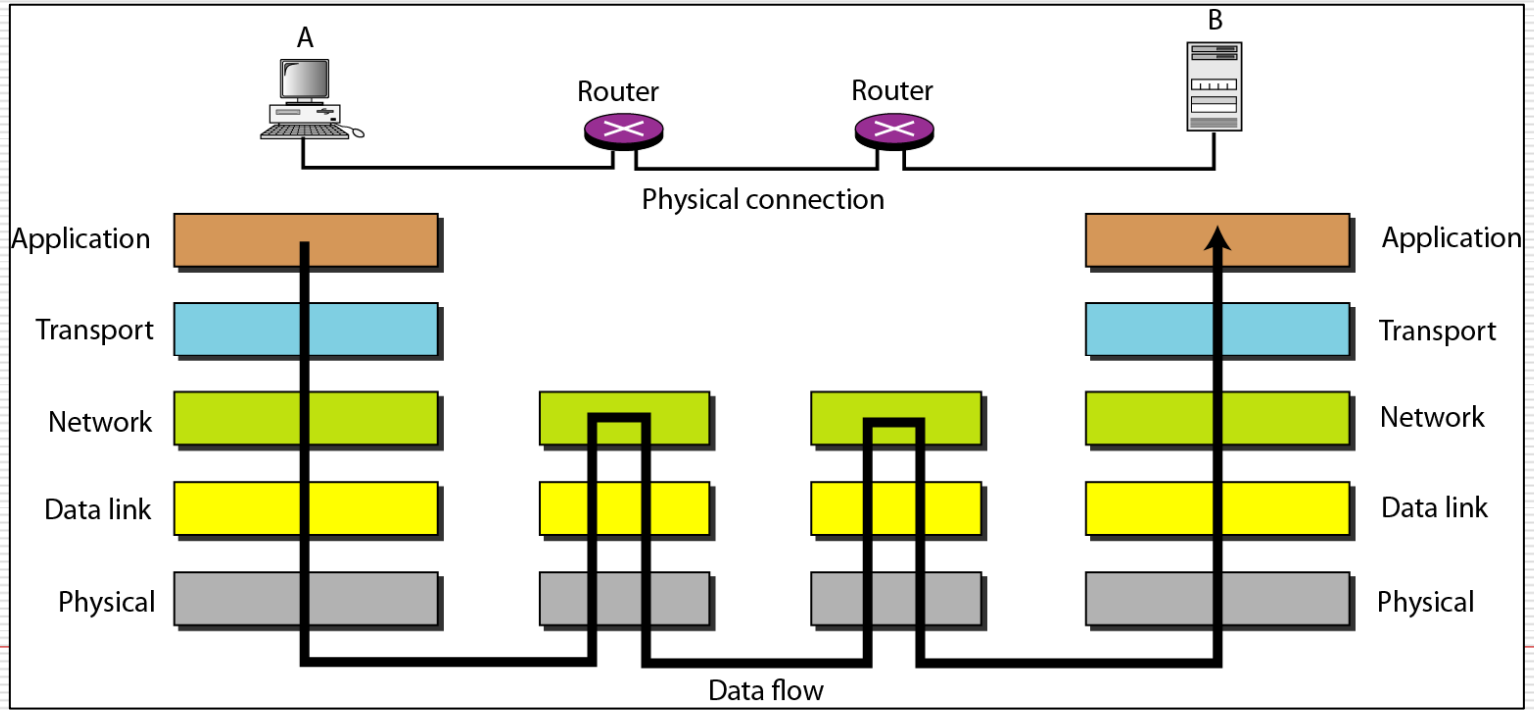

Figure 6.8 **The interaction between layers in the TCP/IP protocol suite**

6.3

LAYERS

Description

- This section briefly describes the function of each **layer** in the TCP/IP protocol suite.
- We show how a message travels through the different layers until it reaches the physical layer and is sent by the transmission media.

Application Layer

- The application layer enables a user, whether human or software, to access the network.
  - services such as electronic mail, remote file access and transfer, browsing the World Wide Web, and so on.

The application layer is responsible for providing services to the user.

Application Layer

- **Client-server architecture**
  - Allow two application programs, running on two remote computers, to communicate with each other

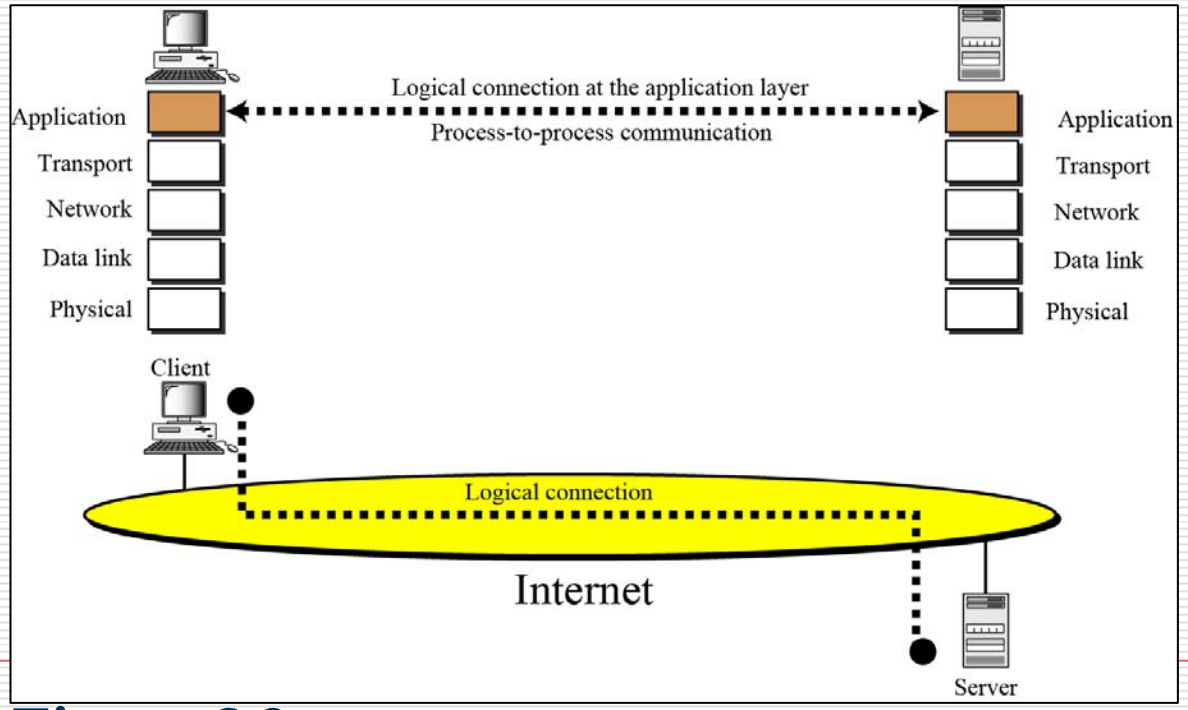

Figure 6.9 **Communication at the application layer**

Application Layer

Application-layer address

- When a client needs to send a request to a server, it needs the server application-layer address.
- For example, to identify one particular site, the client uses a Uniform Resource Locator (URL).

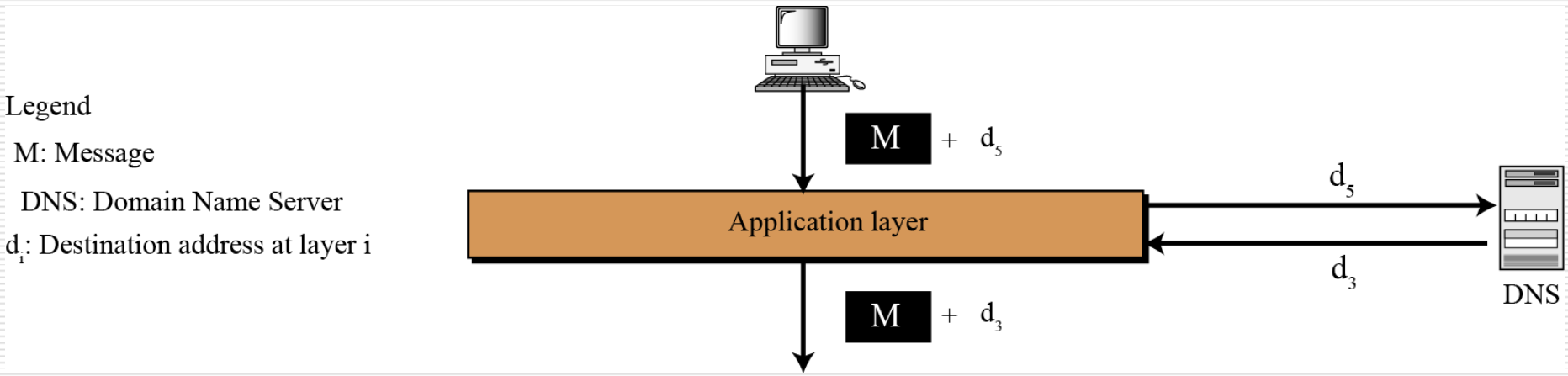

Figure 6.10 **Addresses at the application layer**

Transport layer

- Logical communication
  - process-to-process delivery of the entire message
- The two application layers consider the transport layer as the agent that takes responsibility for delivering the messages.

The transport layer is responsible for the logical delivery of a message between client and server processes.

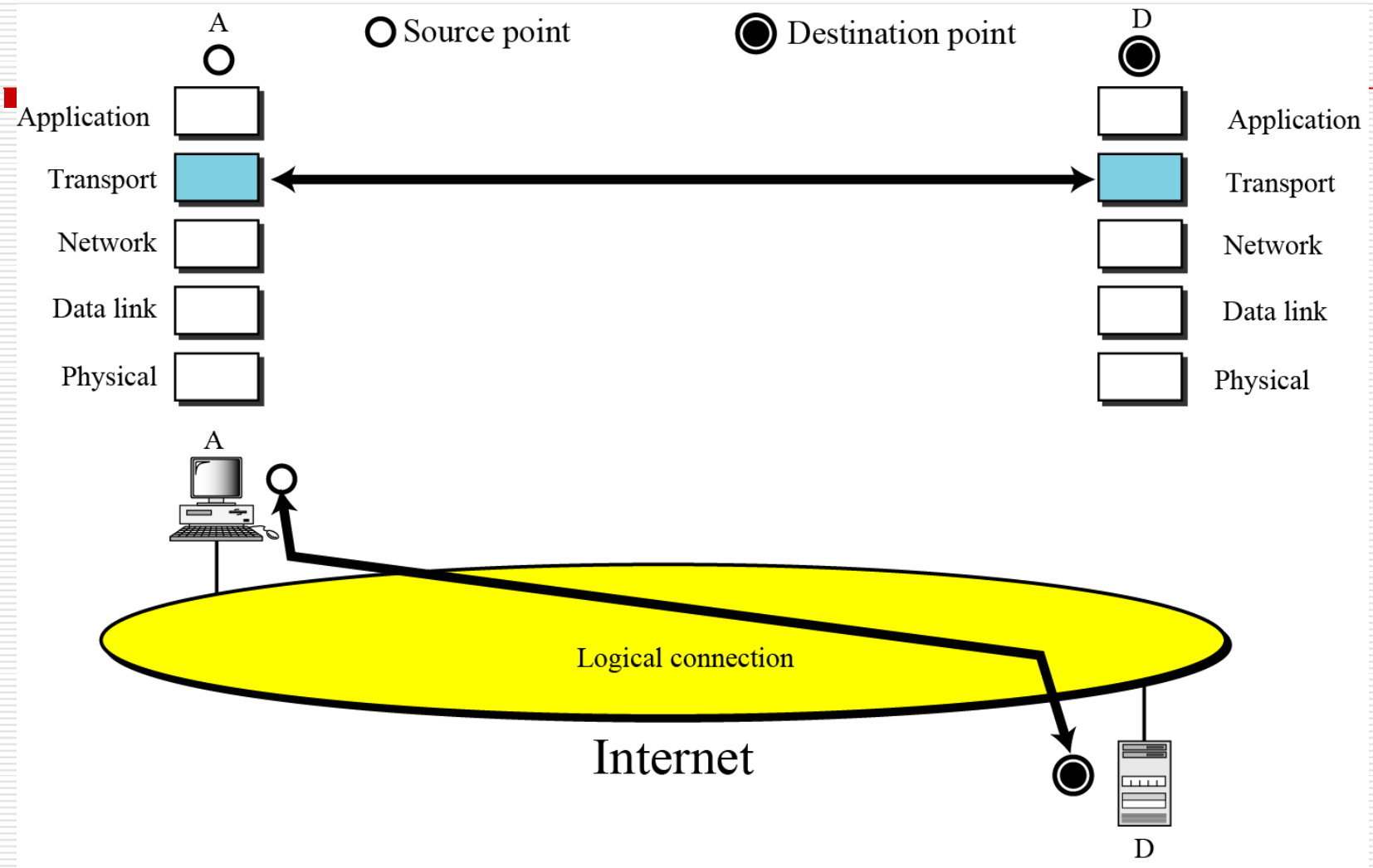

Figure 6.11 **Communication at the transport layer**

Transport layer

- **Transport-layer addresses (port numbers)**
  - The server computer may be running several processes at the same time.
  - Another address for server process identification, called a port number.
  - When the message arrives at the server, it must be directed to the correct process.

Transport layer

Legend

M: Message

d_i: Destination address at layer i

s_i: Source address at layer i

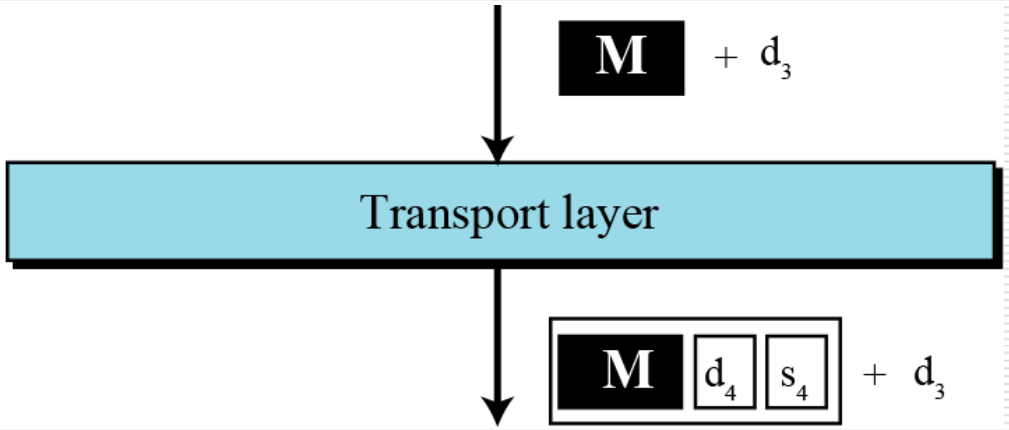

Figure 6.12 **Addresses at the transport layer**

Transport layer

- **Transport-layer protocols**
  - During the life of the TCP/IP protocol suite three transport layer protocols have been designed: **UDP**, **TCP** and **SCTP**.
- **User Datagram Protocol (UDP)**
  - The simplest of all three protocols.
  - UDP does multiplexing and de-multiplexing It also does a type of error control by adding a checksum to the packet.

Transport layer

- **Transmission Control Protocol (TCP)**
  - Support all the duties of a transport layer.
  - It is not as fast and as efficient as UDP.
  - TCP uses sequence numbers, acknowledgment numbers and checksums.
  - It also uses buffers at the sender's site.
  - This combination of provisions provides multiplexing, de-multiplexing, flow control, congestion control and error control.

Transport layer

- **Stream Control Transmission Protocol (SCTP)**
  - A new protocol that is designed for new services expected from the Internet, such as Internet telephony and video streaming.
  - This protocol combines the advantages of both UDP and TCP.
  - Like UDP, it is suitable for real-time transmission of audio and video, but like TCP, it provides error and flow control.

Network layer

- Source-to-destination (computer-to-computer or host-to-host) delivery of a packet, possibly across multiple networks (links).
- Ensure that each packet gets from its point of origin to its final destination.

The network layer is responsible for the delivery of individual packets from the source host to the destination host.

Network layer

Network-layer addresses

- The packet traveling from the client to the server and the packet returning from the server need a network-layer address.
- The server address is provided by the server, while the client address is known by the client computer.

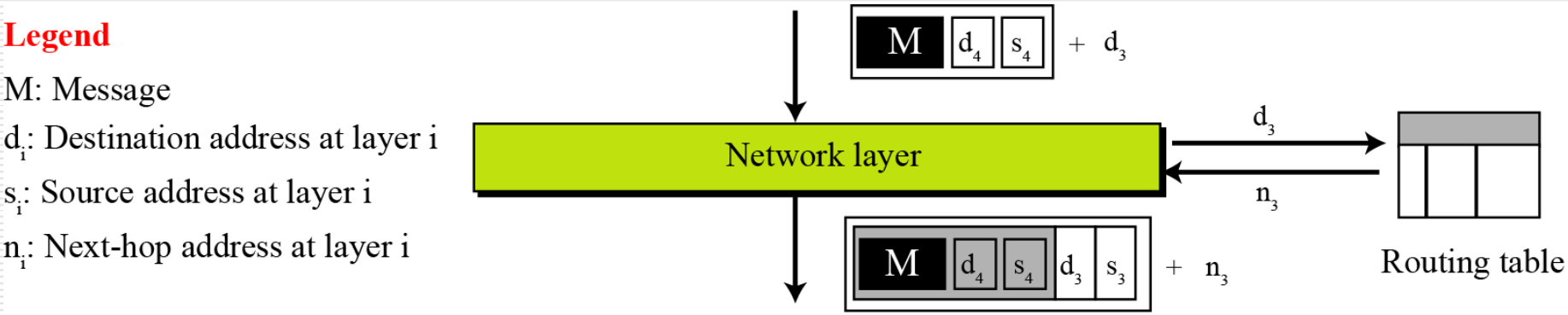

Figure 6.13 **Addresses at the network layer**

Network layer

Routing

- Routing means determination of the partial or total path of a packet.
- The delivery of a packet from its source to its destination may be a combination of several deliveries: a source-to-router delivery, several router-to-router delivery, and finally a router-to-destination delivery.

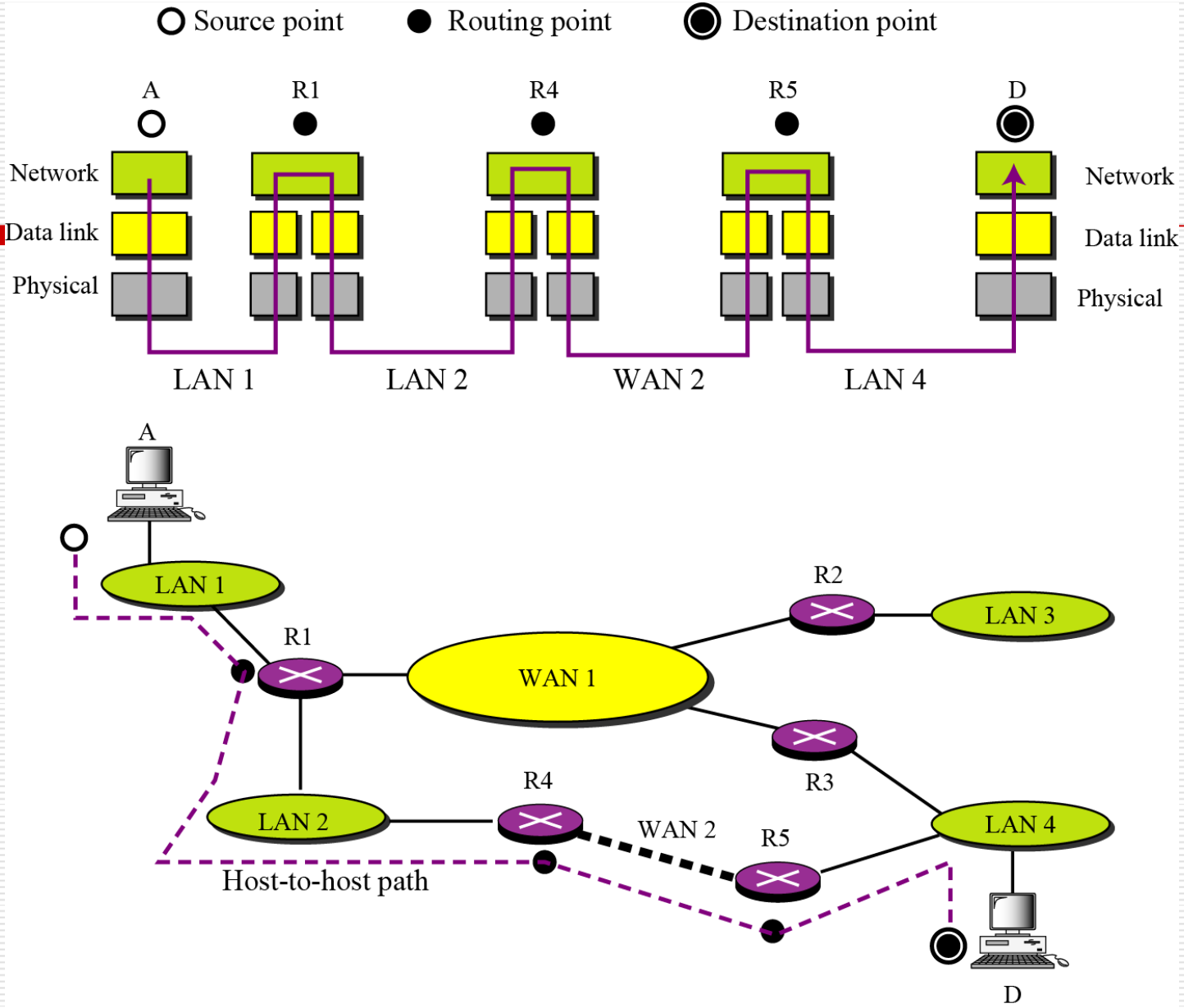

Figure 6.14 **Routing at the network layer**

Network layer

Network-layer protocols

- In the TCP/IP protocol suite, the main protocol at the network layer is **Internet Protocol (IP)**.
- The current version is IPv4 (version 4) although IPv6 (version 6) is also in use, although not ubiquitously.
- IPv4 is responsible for the delivery of a packet from the source to the destination.
- Every computer and router is identified by a 32-bit IP address, which is presented in dotted decimal notation.

Network layer

- **IPv4 address**
  - Divide the 32-bit address into four 8-bit sections
  - Write each section as a decimal number between 0 and 255 with three dots separating the sections. For example,

00001010 00011001 10101100 00001111

is written as **10.25.172.15**

Dotted-Decimal Notation

Data link layer

- The network layer packet may pass through several routers from its source to its destination.
- Carrying the packet from one node (a computer or a router) to another is the responsibility of the data link layer.

The data link layer is responsible for node-to-node delivery of frames.

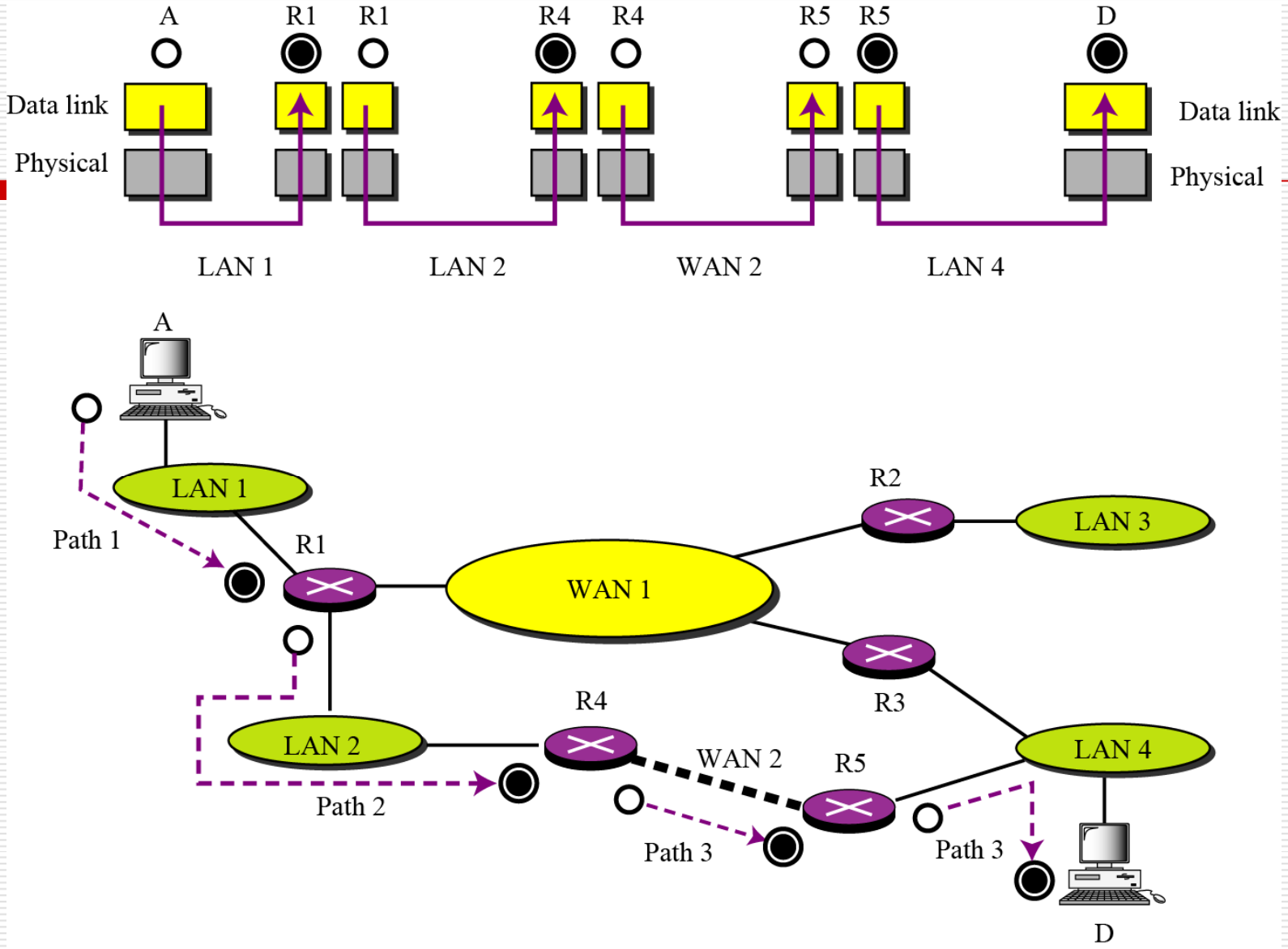

Figure 6.15 **Communication at the data-link layer**

Data link layer

Data-link layer addresses

- Question: How computer A knows the data-link layer address of R1, or R1 knows the data-link layer address of R4.
- A device can find the data-link address of another device either **statically** or **dynamically**.

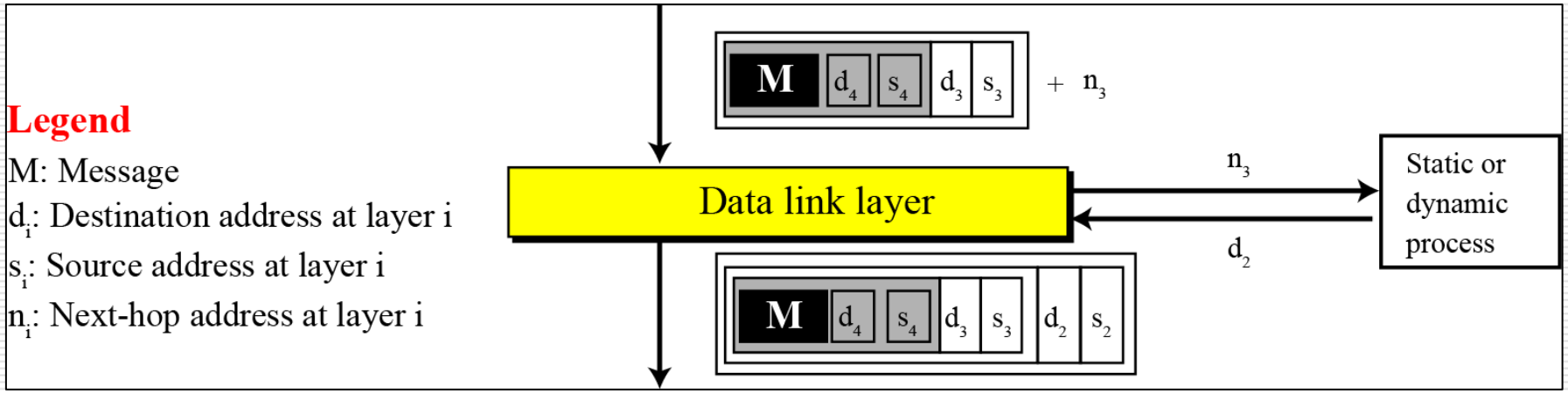

Figure 6.16 **Addresses at the data link layer**

Data link layer

Data-link layer addresses

- Unlike IP addresses, addresses at the data-link layer cannot be universal.
- Each data link protocol may have a different address format and size.
- The Ethernet protocol uses a 48-bit address, which is normally written in hexadecimal format as shown below:

07:01:02:11:2C:5B

Physical layer

- Carry a bit stream over a physical medium.
  - The data link layer is responsible for moving a **frame** from one node to another
  - The physical layer is responsible for moving the **individual bits** that make up the frame to the next node.
- The unit of transfer in the data link layer is a frame, while the unit of transfer in the physical layer is a bit.

The physical layer is responsible for node-to-node delivery of bits

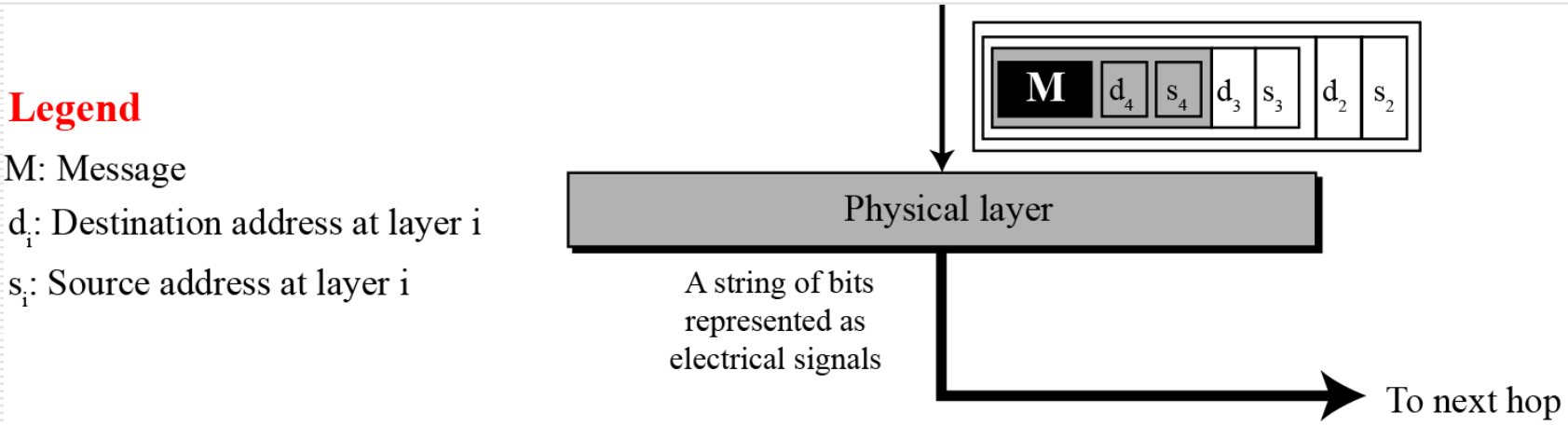

Figure 6.17 **Duty of the physical layer**

Summary of layers

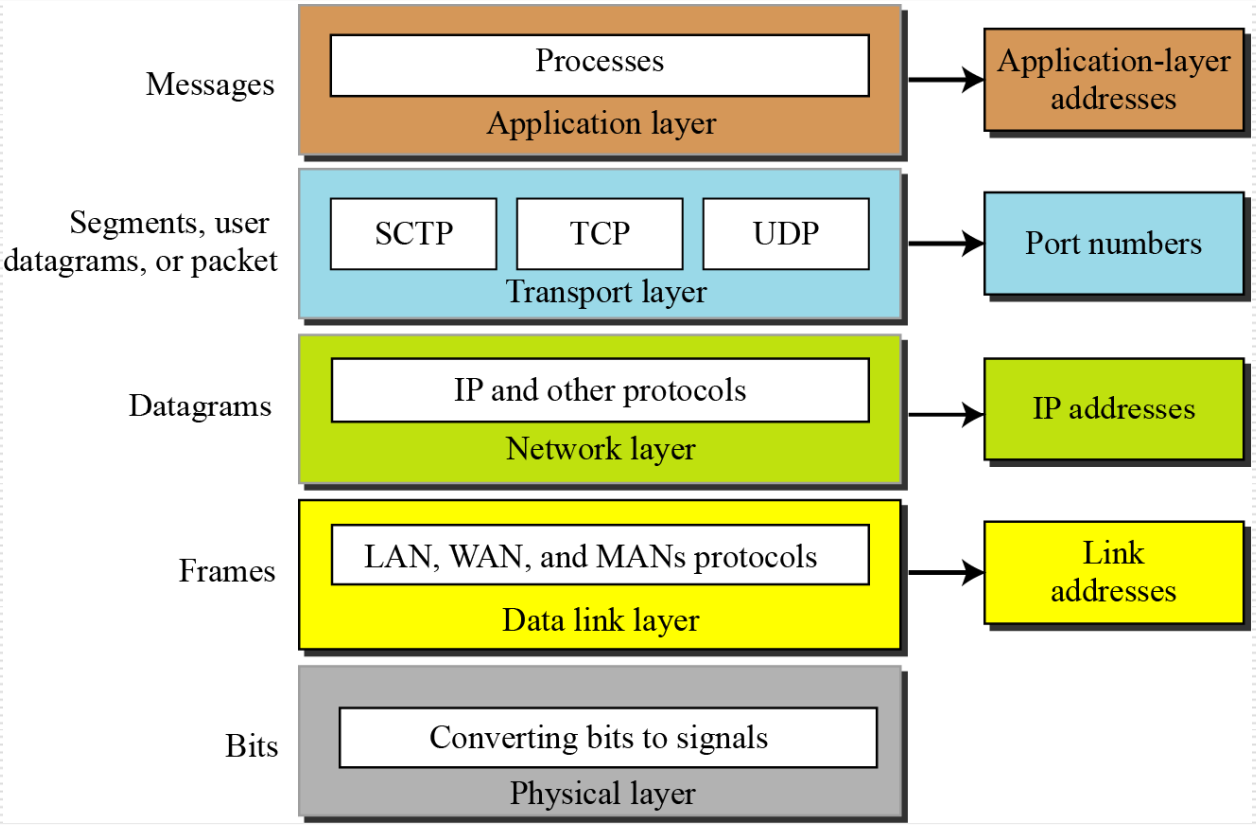

Figure 6.17 **Four levels of addressing in the Internet**

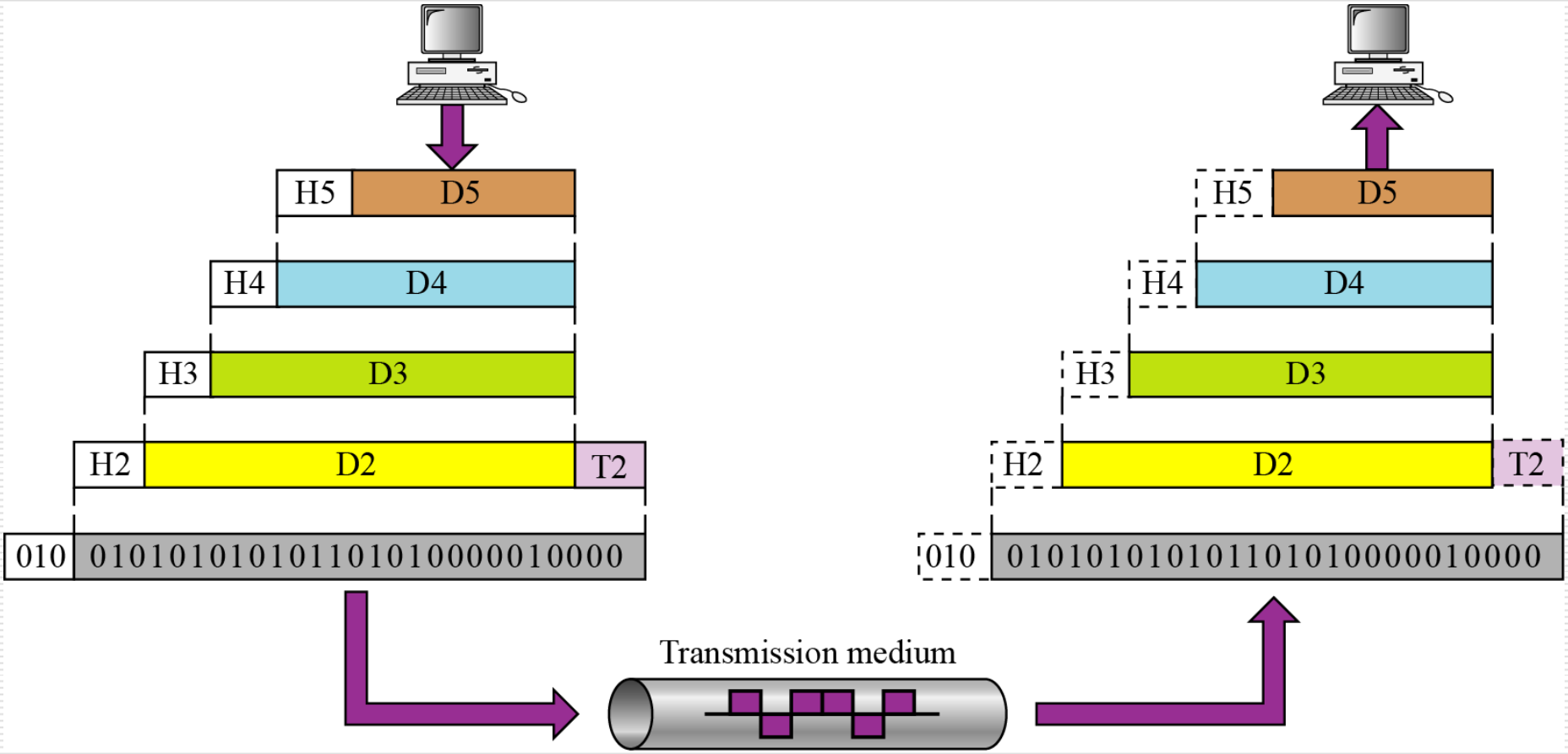

Figure 6.19 **An exchange using the TCP/IP model**